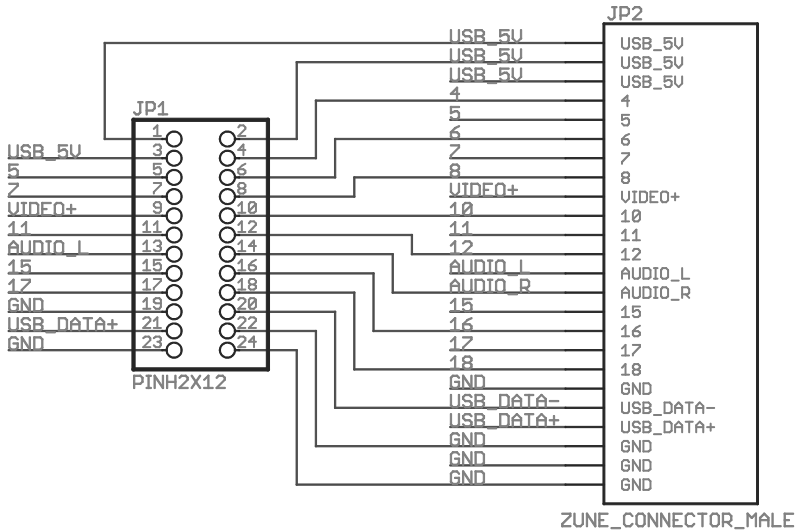

TITLE: Zune Breakout-v10	SFE
Document Number:	REV:
Date: 5/29/2008 02:00:14a	Sheet: 1/1